FSL45 USER MANUAL

Integrated Linear Module with Stepper Motor and Driver Kit | Ball Screw Linear Actuator | 50-1000 mm Stroke

Features

4-in-1 Integrated Design
Integrates linear guide rail, ball screw, stepper motor / servo motor, and driver into one unit.

Closed-Loop Control
Encoder feedback enables real-time position error correction and position error alarm functions.

Positioning Accuracy
±0.02 mm positioning accuracy with a G1610 ball screw (16 mm diameter, 10 mm lead).

Load Capacity
Supports up to 20 kg horizontal load and 10 kg vertical, side-mounted, and hoisting loads.

oyostepper.com

Speed & Noise
Maximum horizontal speed of 200 mm/s, vertical speed of 100 mm/s, and operating noise ≤65 dB.

Motor & Wiring
Integrated motor and driver with automatic current adjustment according to load requirements.

Stroke Options
Available in 200 mm, 300 mm, 500 mm, 800 mm, 850 mm, 900 mm, and 1000 mm strokes.
Supports customized strokes, motor configurations, and multi-axis systems.

Contact Us
E-mail:support@oyostepper.com
Telephone Number: +86-023-68438829
Official Site:https://www.oyostepper.com

TECHNICAL SPECIFICATIONS

FSL45 | Integrated Linear Module

Model	FSL45
Product Type	Integrated Linear Module
Motor	5784 stepper motor / 400W AC servo motor
Drive System	G1610 Ball Screw
Ball Screw Diameter	16 mm
Ball Screw Lead	10 mm
Positioning Accuracy	±0.02 mm
Effective Stroke	50-1000 mm
Horizontal Load	20 kg
Vertical Load	10 kg
Side Load	10 kg
Hoisting Load	10 kg
Horizontal Speed	200 mm/s
Vertical Speed	100 mm/s
Side Mounted Speed	100-150 mm/s
Down Mounted Speed	200 mm/s
Noise Level	≤65 dB
Operating Temperature	-10°C to +50°C
Optional Motor	400W AC Servo Motor
Customization	Stroke / Motor / Multi-Axis

oyostepper.com

Integrated Linear Module

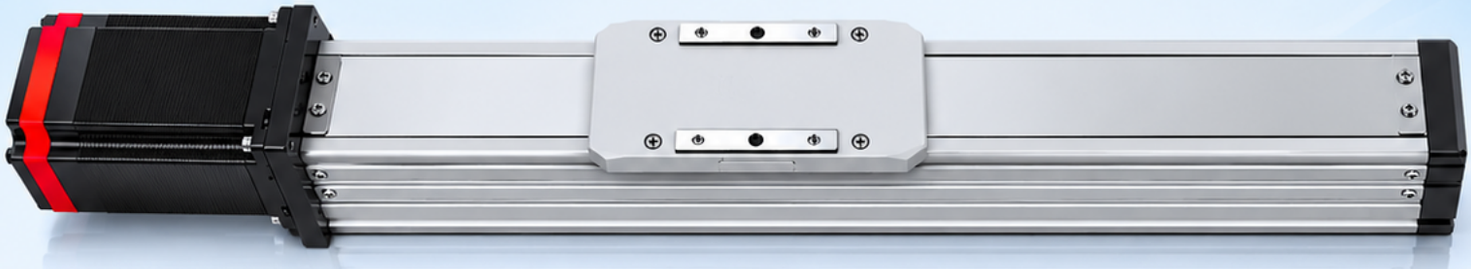

Top View (Mounting Dimensions)

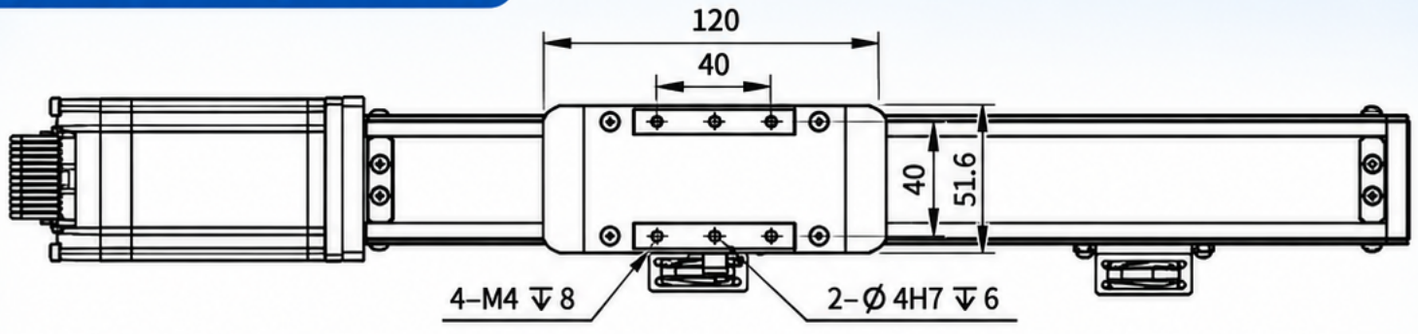

oyostepper.com



Side View (Installation & Stroke Dimensions)

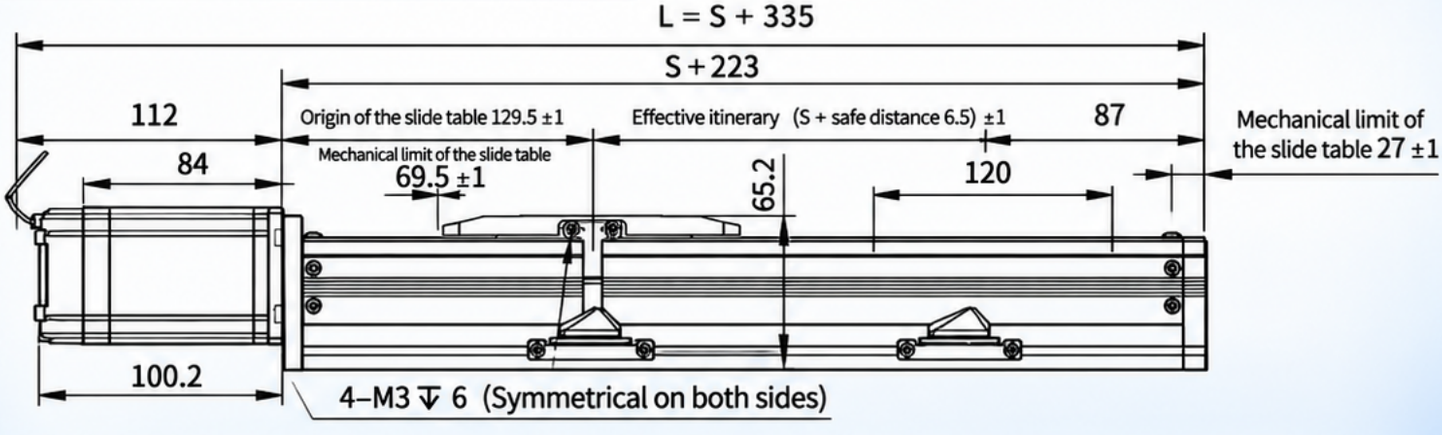

Integrated Linear Module



Top/Side View (Dimensions)

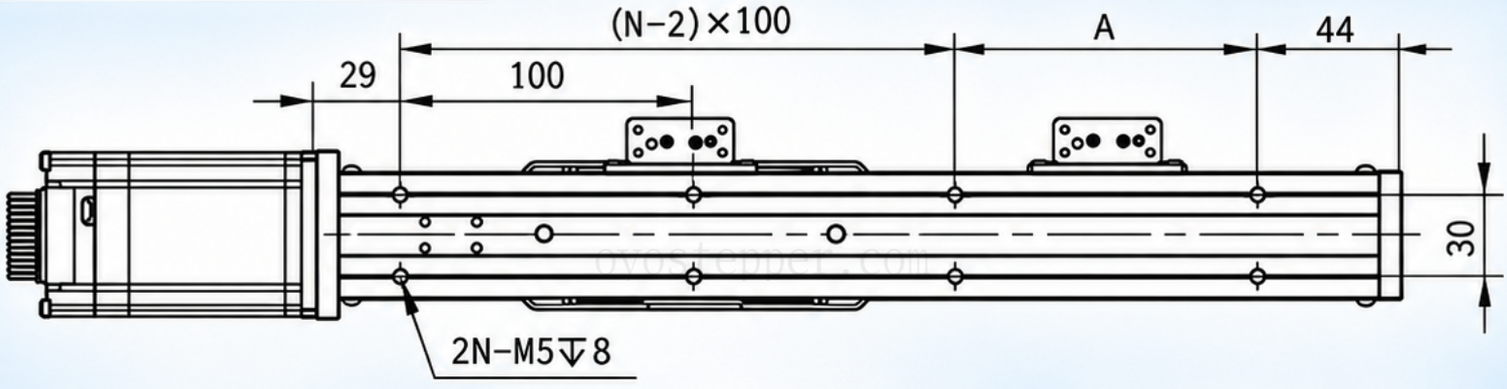

Front View

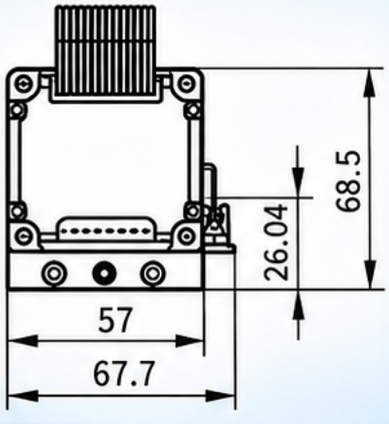

End View

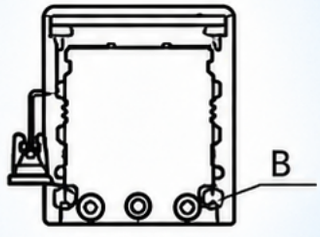

Detail B (2 : 1)

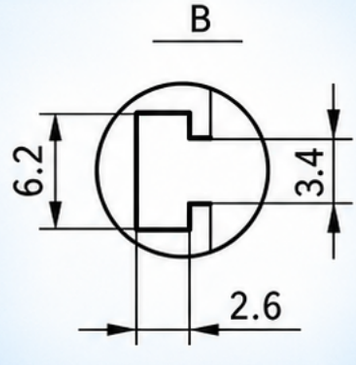

FSL45 Technical Parameters

Position Accuracy	Ball Screw Diameter	Lead
±0.02 mm	ϕ16 mm	10 mm

Project	Item	Loadings (kg)			
		5	10	15	20
5784 Stepper Motor	Horizontal Speed (mm/s)	200	200	200	200
	Side Mounted Speed (mm/s)	150	100	—	—
	Vertical Speed (mm/s)	100	100	—	—
	Down Mounted Speed (mm/s)	200	200	—	—
	Noise (dB)	≤65			
400W AC Servo Motor	Horizontal Speed (mm/s)	400	400	400	400
	Side Mounted Speed (mm/s)	400	400	—	—
	Vertical Speed (mm/s)	400	400	—	—
	Down Mounted Speed (mm/s)	400	400	—	—
	Noise (dB)	≤65			
Operating Temperature (°C)		-10°C ~ +50°C			